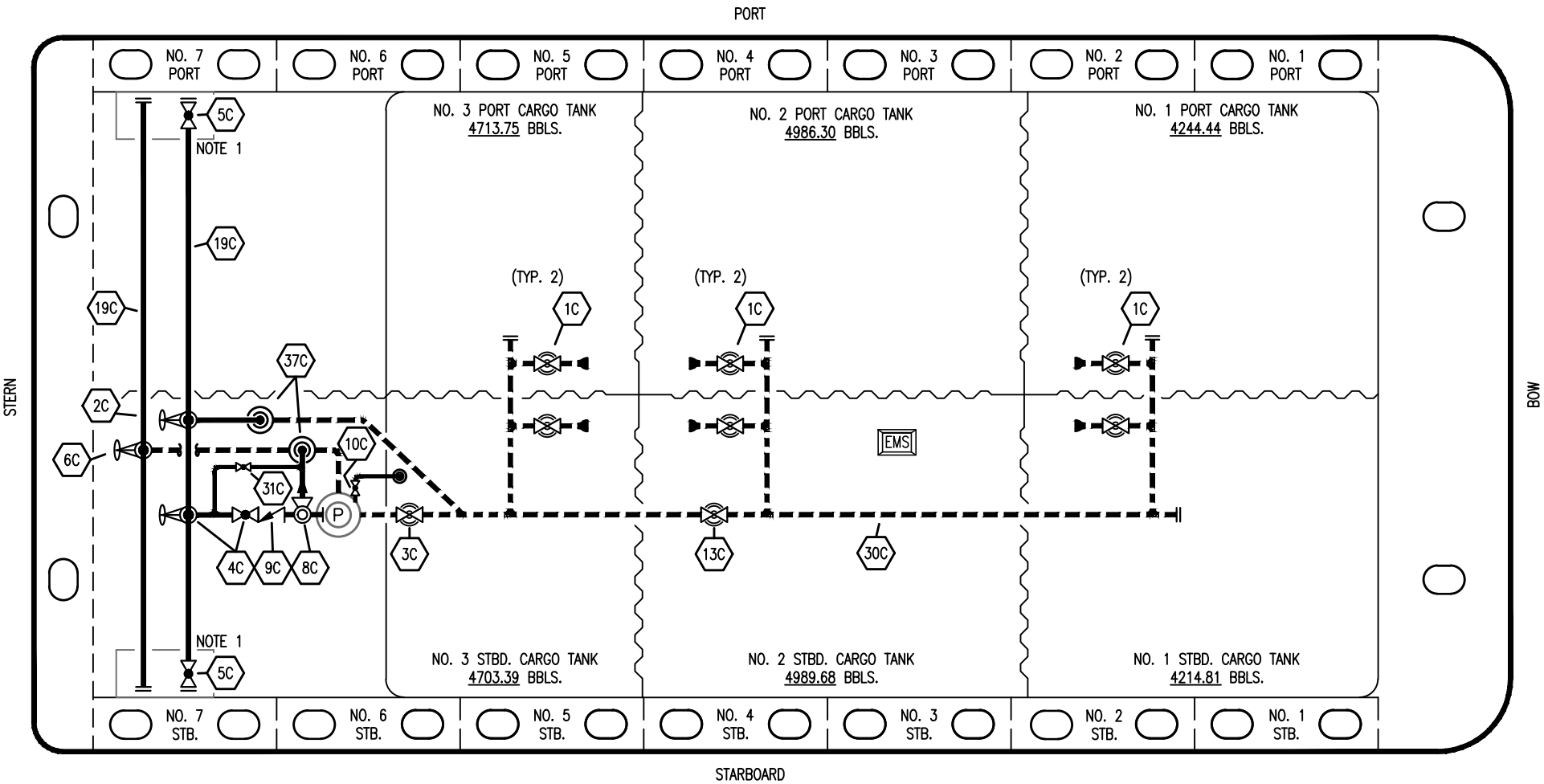

NO	DESCRIPTION
1C	CARGO TANK VALVE
2C	LOAD VALVE
3C	MASTER SUCTION VALVE
4C	DISCHARGE VALVE
5C	HEADER VALVE
6C	SALVAGE VALVE
8C	RELIEF VALVE
9C	CHECK VALVE
10C	BURP VALVE

NO	DESCRIPTION
13C	CARGO PIPING BLOCK VALVE
19C	CARGO HEADER
30C	CARGO PIPELINE
31C	BYPASS VALVE
37C	CARGO DROP
	ABOVE DECK PIPING
	BELOW DECK PIPING

NOTE 1: CONTAINMENT P/S

REV.	DATE	BY	CHK	APP	REVISION DESCRIPTION
0	03/24/26	JES	DDA	LEP	ISSUED FOR APPROVAL

KIRBY INLAND MARINE

CARGO

PIPING FLOW DIAGRAM

SCALE: NONE

PAGE: 1 OF 3

MMI 2805

REV. **0**

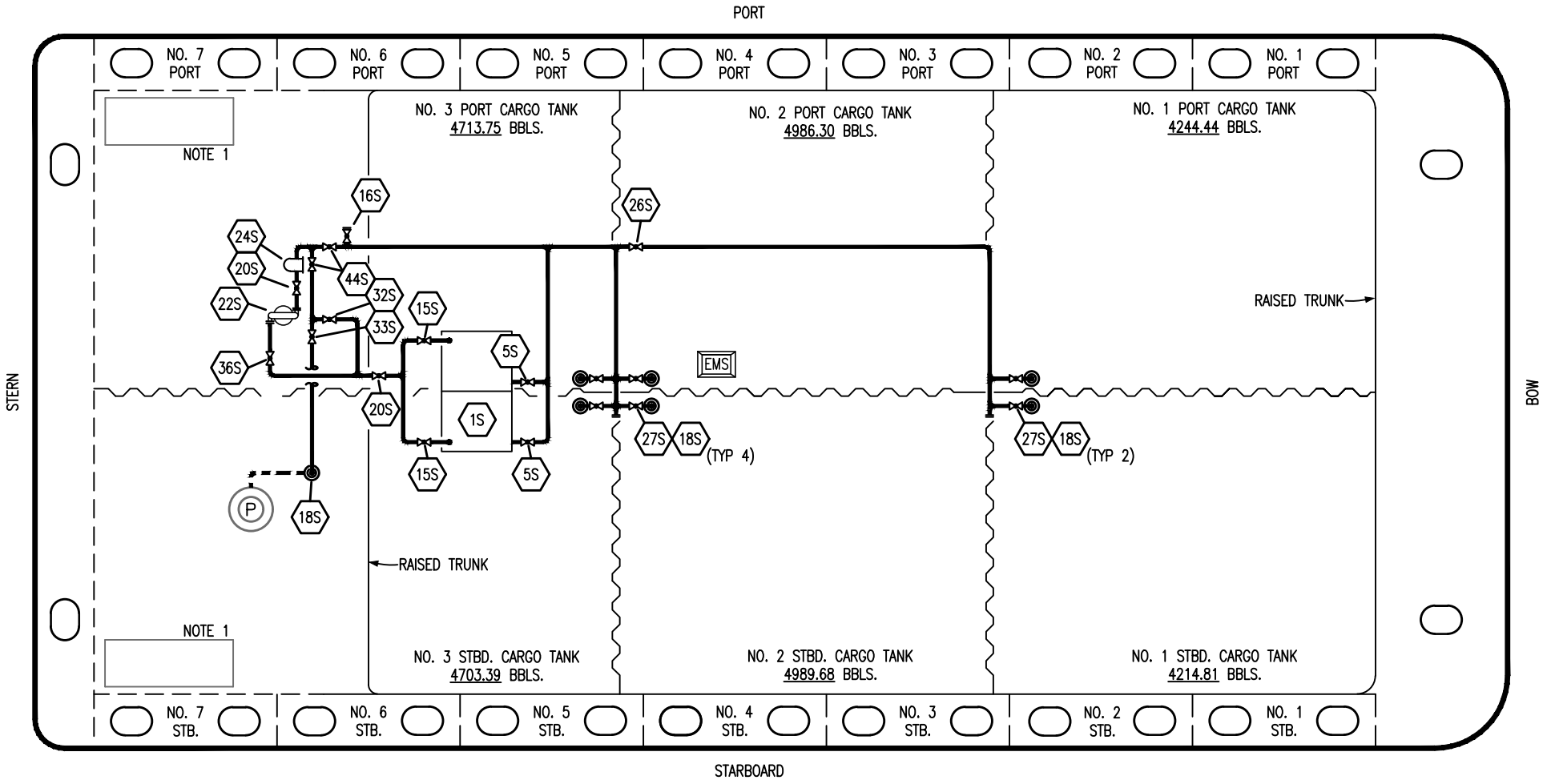

NO	DESCRIPTION
1S	SLOP TANK
5S	SLOP TANK SUCTION VALVE
10S	STRIPPING PUMP CHECK VALVE
16S	REMOTE SUCTION CONNECTION/DISCHARGE
18S	TYP. STRIPPING PENETRATION
20S	BLOCK VALVE
24S	BASKET STRAINER
22S	STRIPPING PUMP

NO	DESCRIPTION
26S	STRIPPING HEADER BLOCK VALVE
27S	SUMP SUCTION VALVE
32S	PUMP WELL PRIMER VALVE
33S	PUMP WELL SUCTION
36S	STRIPPING PUMP DISCHARGE
44S	STRIPPING PUMP SUCTION
	ABOVE DECK PIPING
	BELOW DECK PIPING

NOTE 1: CONTAINMENT P/S

REV.	DATE	BY	CHK	APP	REVISION DESCRIPTION
0	03/24/26	JES	DDA	LEP	ISSUED FOR APPROVAL

KIRBY INLAND MARINE

STRIPPING

PIPING FLOW DIAGRAM

SCALE: NONE

PAGE: 3 OF 3

MMI 2805

REV. **0**

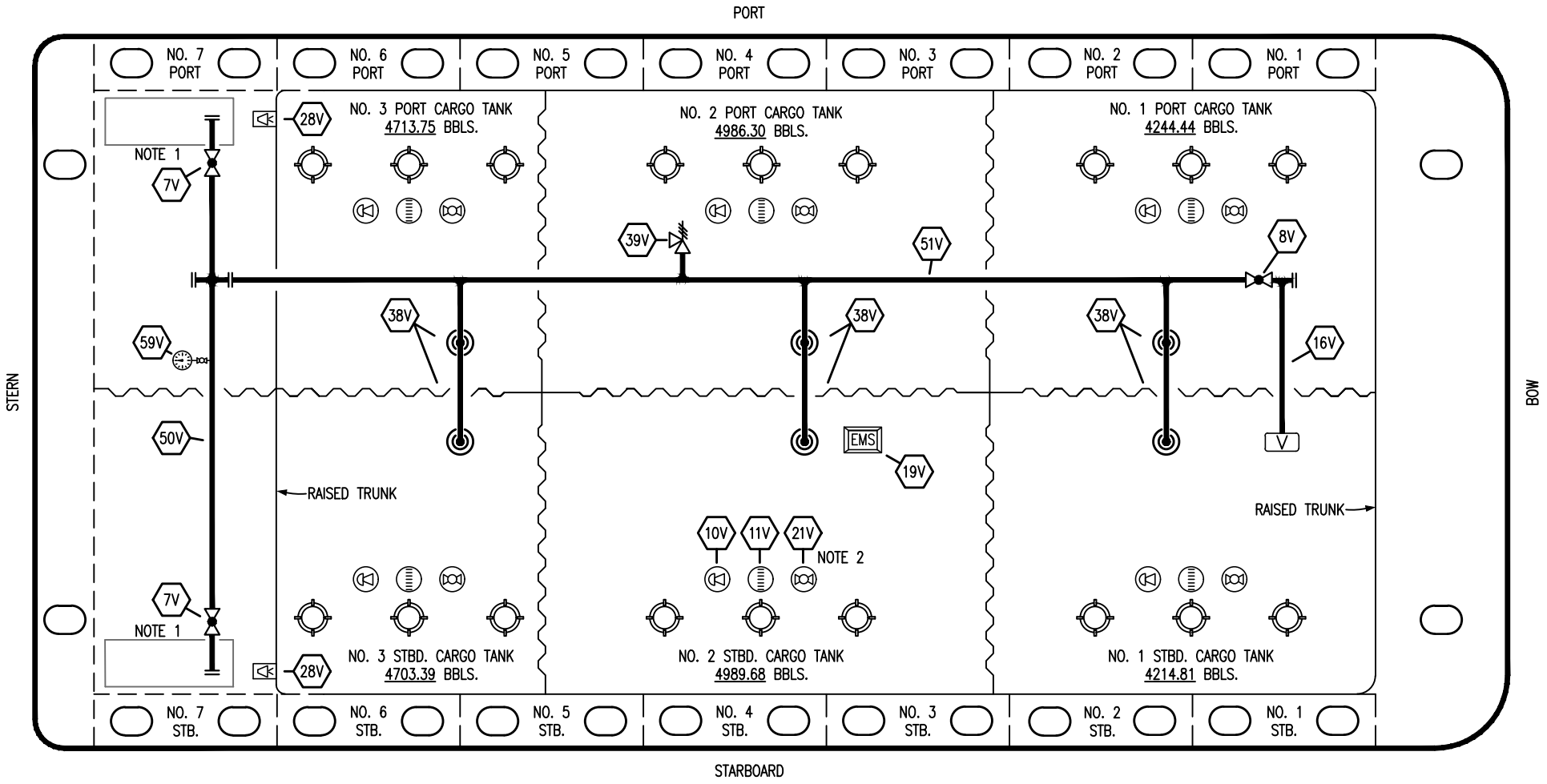

NO	DESCRIPTION
7V	HEADER VALVE
8V	VENT STACK VALVE
10V	HIGH LEVEL/OVERFILL ALARM
11V	1-METER GAUGE STICK
16V	VAPOR VENT STACK
19V	EMERGENCY ENGINE SHUT DOWN
21V	HERMETIC GAUGE

NO	DESCRIPTION
28V	DOCK CONNECTION ALARM
38V	VAPOR PENETRATION
39V	PRESSURE/VACUUM VALVE
50V	VAPOR HEADER
51V	VAPOR PIPELINE
59V	PRESS/VAC GAUGE
	ABOVE DECK PIPING

NOTE 2: TYPICAL RIGGING IN EACH TANK

NOTE 1: CONTAINMENT P/S

REV.	DATE	BY	CHK	APP	REVISION DESCRIPTION
0	03/24/26	JES	DDA	LEP	ISSUED FOR APPROVAL

KIRBY INLAND MARINE

VAPOR

PIPING FLOW DIAGRAM

SCALE: NONE

PAGE: 2 OF 3

MMI 2805

REV. **0**