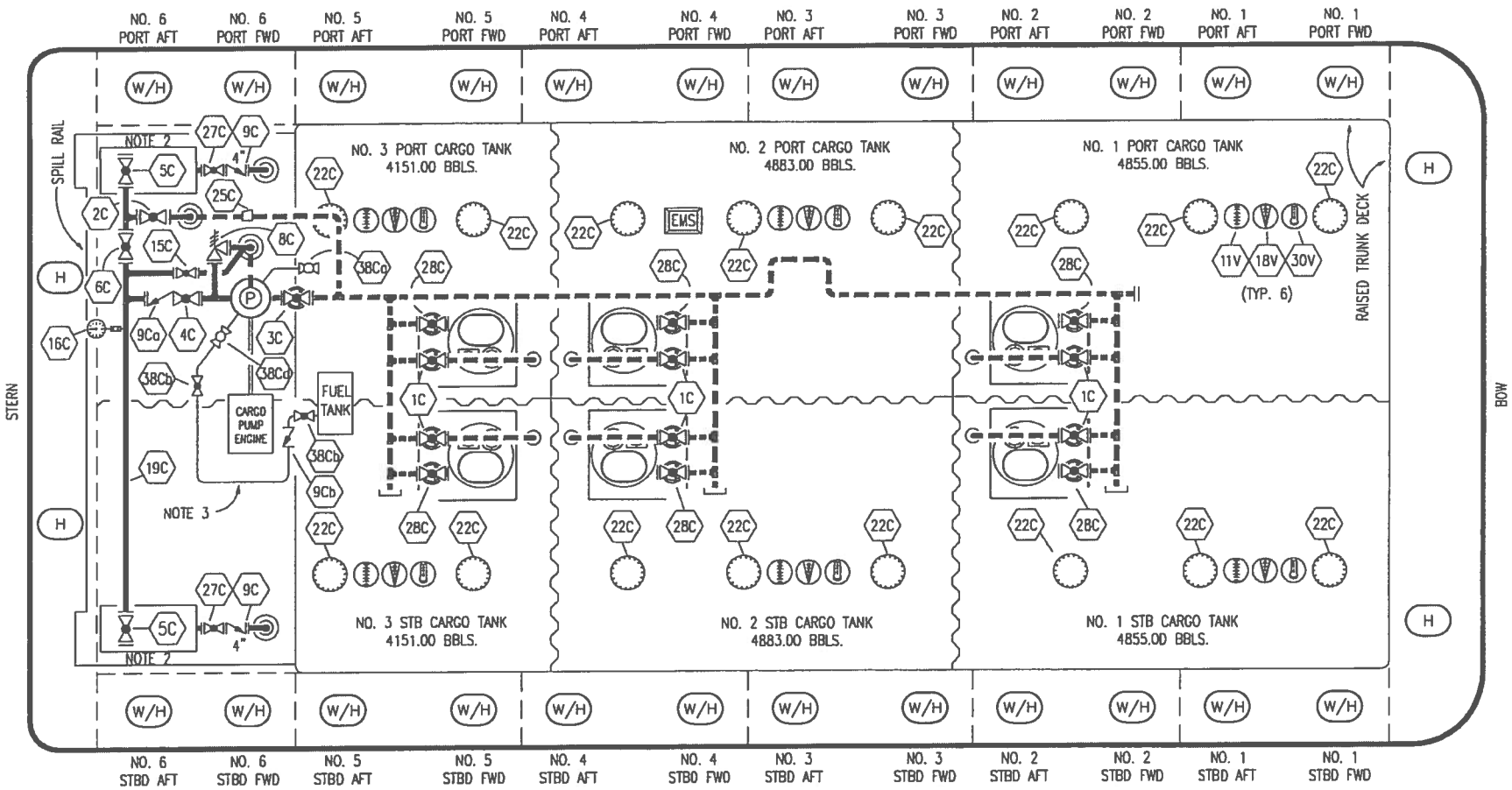

NO	SIZE	DESCRIPTION
1C	8"	CARGO TANK VALVE
2C	8"	LOAD VALVE
3C	10"	MASTER SUCTION VALVE
4C	8"	DISCHARGE VALVE
5C	8"	HEADER VALVE
6C	8"	SALVAGE VALVE
8C	6"	RELIEF VALVE
9Ca	8"	CHECK VALVE
9Cb	1"	CHECK VALVE
15C	2"	BYPASS VALVE (AROUND CHECK VALVE)
16C		DISCHARGE PRESSURE GAUGE

ND	SIZE	DESCRIPTION
19C	8"	CARGO HEADER
22C	19"	BUTTERWORTH
25C	10"x8"	ECCENTRIC REDUCER
27C	4"	DRIP PAN DRAIN VALVE
28C	6"	HIGH LOAD VALVE
11V		GAUGE STICK (LENGTH)
18V		RESTRICTIVE GAUGE TUBE
30V		THERMAL WELL WITH PIPE CAP
38Ca		DEEPWELL DRAIN VALVE
38Cb	1"	GATE VALVE
38Cc	1"	SPRING VALVE

NOTE 2: 6 BARREL DRIP PAN

NOTE 3: PICKLING LINE

ABOVE DECK PIPING

BELOW DECK PIPING

TRINITY MARINE

REV.	DATE	BY	CHK	APP	REVISION DESCRIPTION
A	05/18/11	JN	DDA		ISSUED FOR APPROVAL

KIRBY INLAND MARINE

CARGO

PIPING FLOW DIAGRAM

SCALE: NONE

PAGE: 1 OF 3

KIRBY 27769

REV. **A**

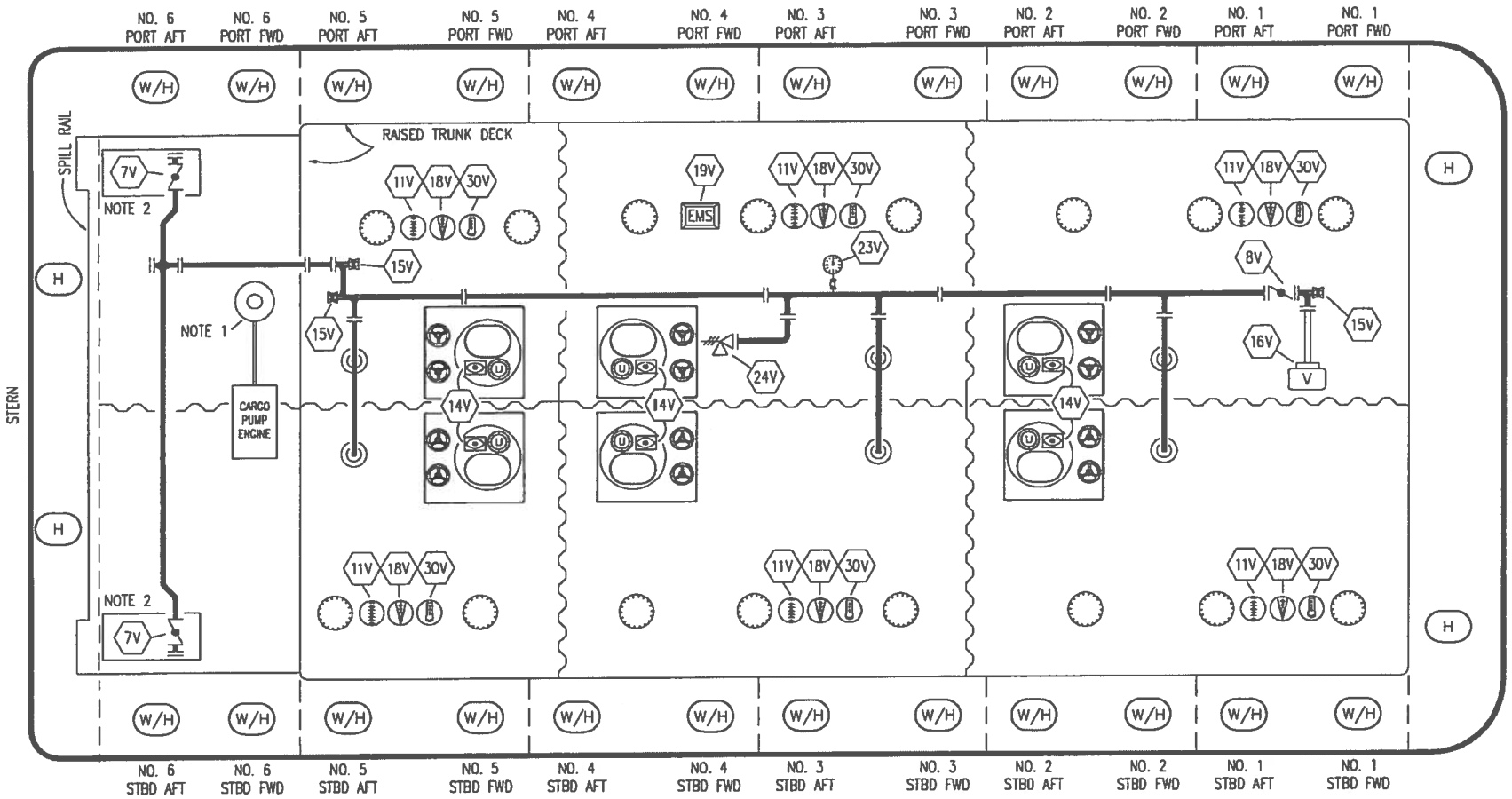

NO	SIZE	DESCRIPTION
7V	8"	HEADER VALVE
8V	8"	VENT STACK VALVE
11V		GAUGE STICK (LENGTH)
14V		SIGHT GLASS
15V		INSPECTION PORT
16V	8"	VAPOR VENT STACK
18V		RESTRICTIVE GAUGE TUBE
19V		EMERGENCY SHUTDOWN SYSTEM
23V		PRESSURE GAUGE

NO	SIZE	DESCRIPTION
24V	6"	PRESSURE RELIEF VALVE
30V	2"	THERMAL WELL WITH PIPE CAP

NOTE 1: DEEPWELL PUMP

NOTE 2: 6 BARREL DRIP PAN

ABOVE DECK PIPING ———

REV.	DATE	BY	CHK	APP	REVISION DESCRIPTION
A	05/18/11	JN	DDA		ISSUED FOR APPROVAL

KIRBY INLAND MARINE

VAPOR

PIPING FLOW DIAGRAM

SCALE: NONE

PAGE: 2 OF 3

KIRBY 27769

REV. **A**

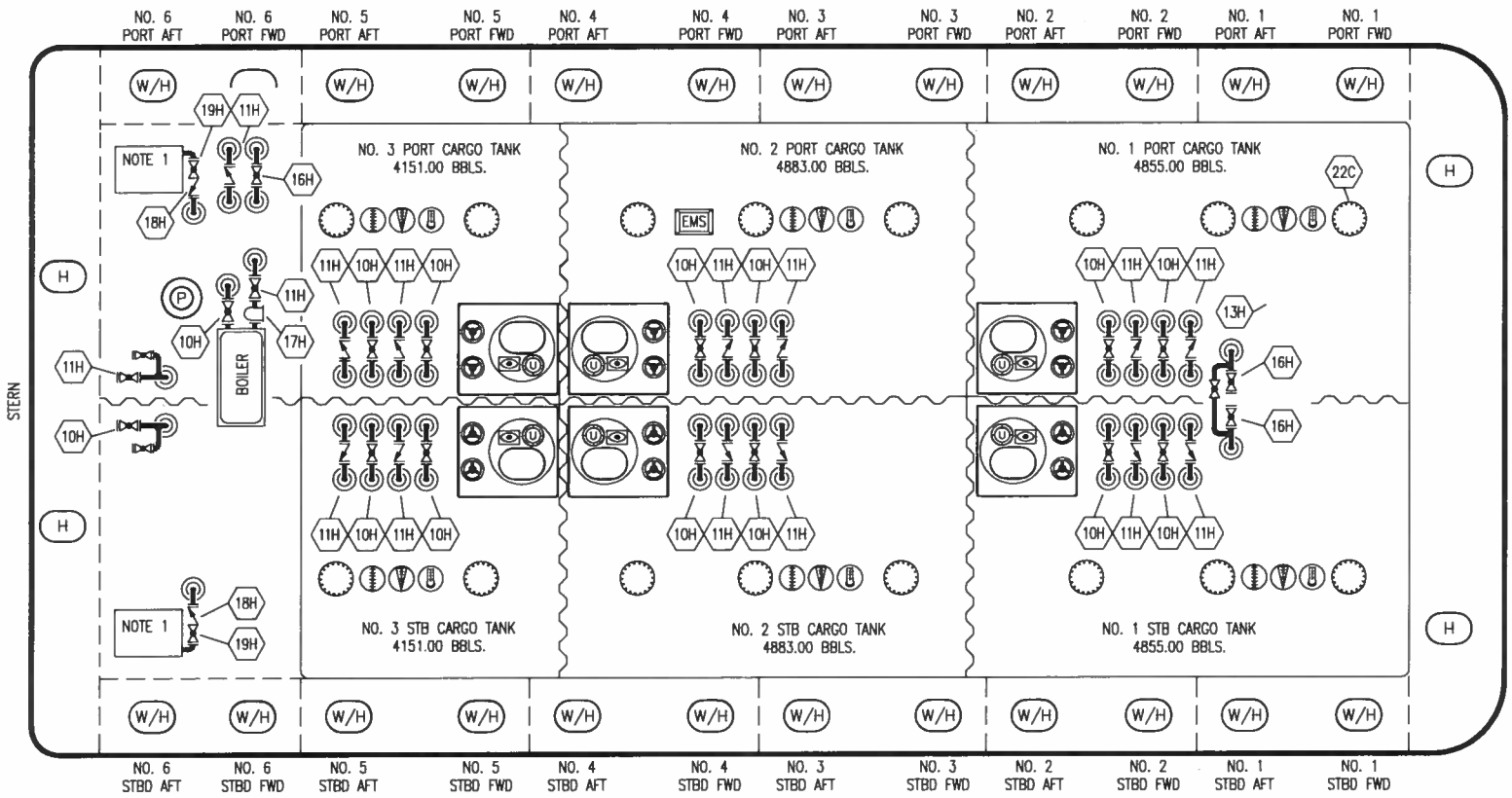

NO	DESCRIPTION
10H	SUPPLY VALVE
11H	RETURN
12H	PRESSURE REGULATOR
13H	BY-PASS
16H	ISOLATION VALVE
17H	BASKET STRAINER
18H	CHECK VALVE
19H	DRIP PAN DRAIN VALVE
———	ABOVE DECK PIPING

NOTE 1: 6 BARREL DRIP PAN

TRINITY MARINE

REV.	DATE	BY	CHK	APP	REVISION DESCRIPTION
1	06/10/13	GP	DDA		REMOVED PRESSURE REG.
A	05/18/11	JN	DDA		ISSUED FOR APPROVAL

KIRBY INLAND MARINE

HOT OIL

PIPING FLOW DIAGRAM

SCALE: NONE

PAGE: 3 of 3

KIRBY 27769

REV. 1