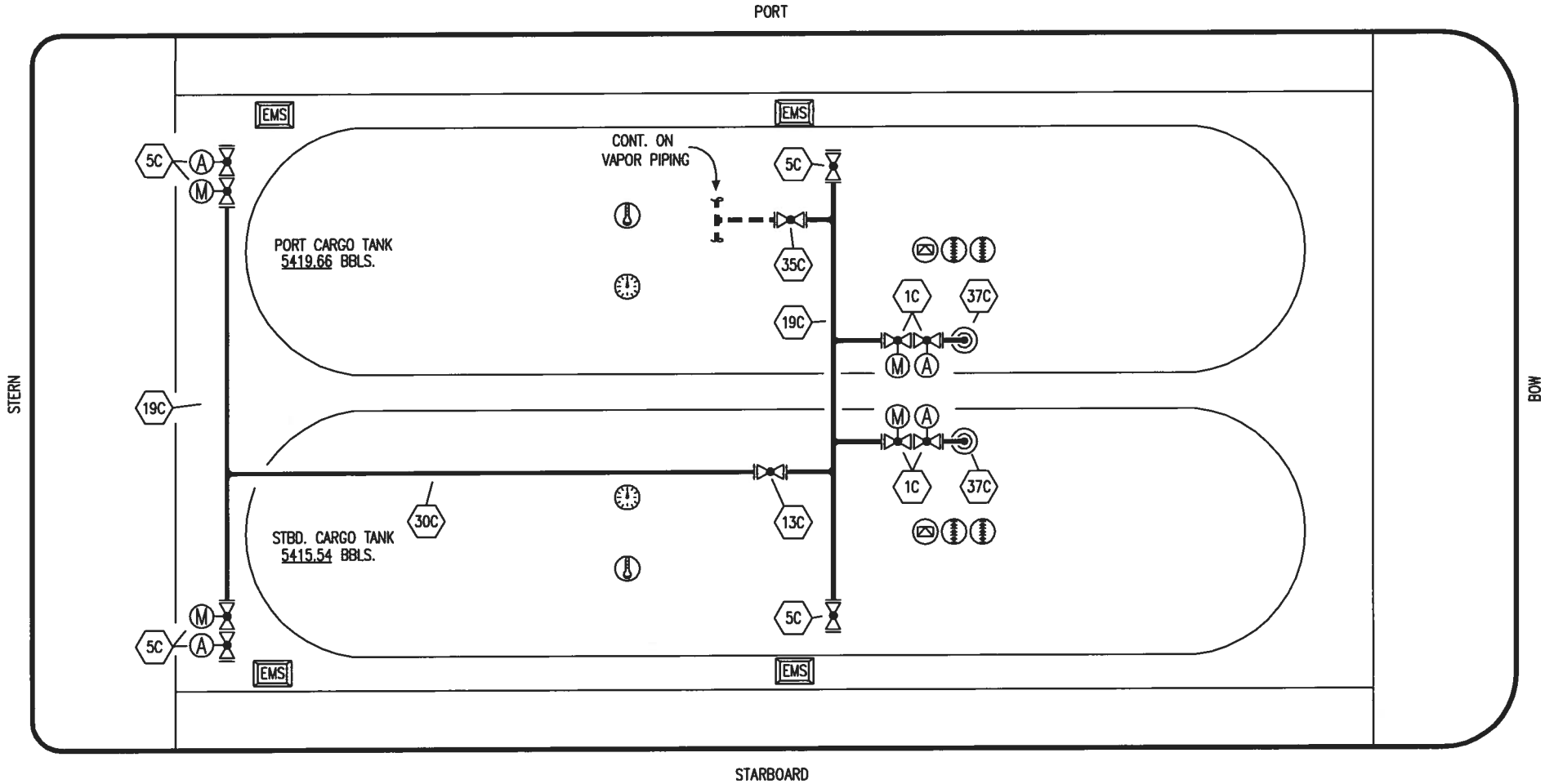

NO	DESCRIPTION
1C	CARGO TANK VALVE
5C	HEADER VALVE
13C	CARGO PIPING BLOCK VALVE
19C	CARGO HEADER
30C	CARGO PIPELINE
35C	CROSSOVER VALVE
37C	CARGO DROP
———	ABOVE DECK PIPING
M	MANUEL VALVE
A	AUTOMATIC VALVE

CARUTHERSVILLE SHIPYARD EX: HW CHEM 114

REV.	DATE	BY	CHK	APP	REVISION DESCRIPTION
0	04/06/09	WK	RB	OF	APPROVED

KIRBY INLAND MARINE

CARGO

PIPING FLOW DIAGRAM

SCALE: NONE

PAGE: 1 OF 2

KIRBY 10808

REV. **0**

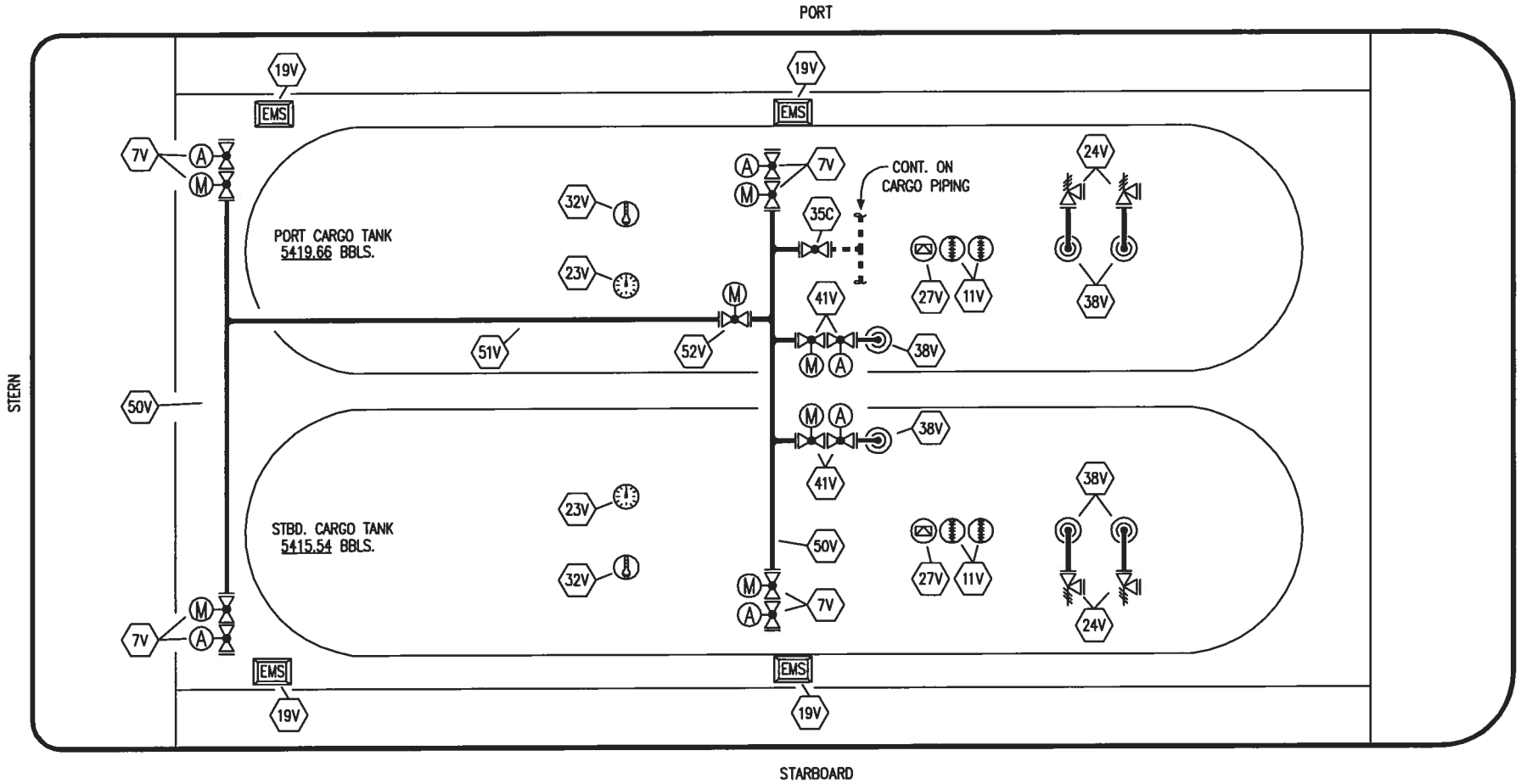

NO	DESCRIPTION
7V	HEADER VALVE
11V	1 METER GAUGE STICK
19V	EMERGENCY SHUT DOWN
23V	PRESSURE GAUGE
24V	PRESSURE RELIEF VALVE
27V	SPEW VALVE
32V	TEMPERATURE GAUGE
35C	CROSSOVER VALVE
38V	VAPOR DROP

NO	DESCRIPTION
41V	VAPOR TANK VALVE
50V	VAPOR HEADER
51V	VAPOR PIPELINE
52V	BLOCK VALVE
—	ABOVE DECK PIPING
M	MANUEL VALVE
A	AUTOMATIC VALVE

CARUTHERSVILLE SHIPYARD EX: HW CHEM 114

REV.	DATE	BY	CHK	APP	REVISION DESCRIPTION
0	04/06/09	WK	RB	OF	APPROVED

KIRBY INLAND MARINE

VAPOR

PIPING FLOW DIAGRAM

SCALE: NONE

PAGE: 2 OF 2

KIRBY 10808

REV. 0